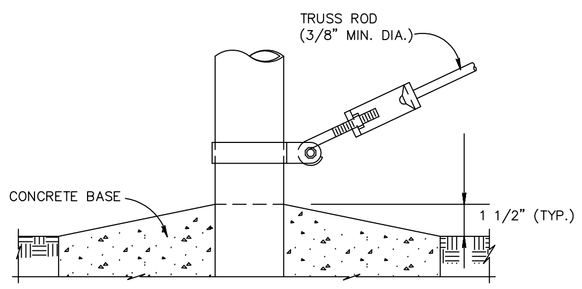

TRUSS ROD AND BAND

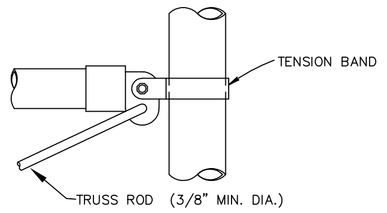

ROUND POST

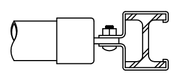

H-BEAM

BRACE RAIL CLAMP DETAILS

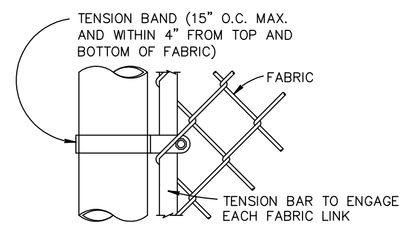

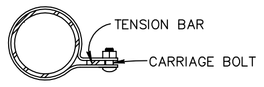

END OR GATE POST DETAIL

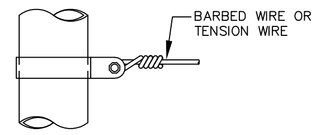

TENSION BAND DETAIL

FASTENING DETAILS

NO SCALE

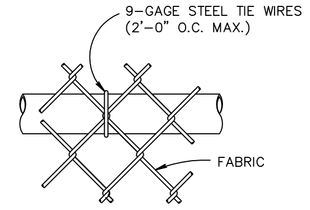

TOP OR BRACE RAIL ATTACHMENT

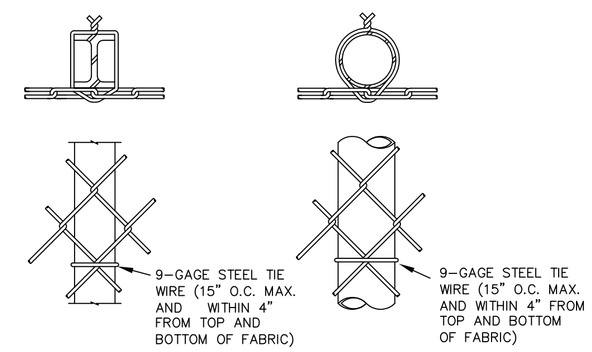

H-BEAM ROUND POST

LINE POST ATTACHMENTS

NO SCALE

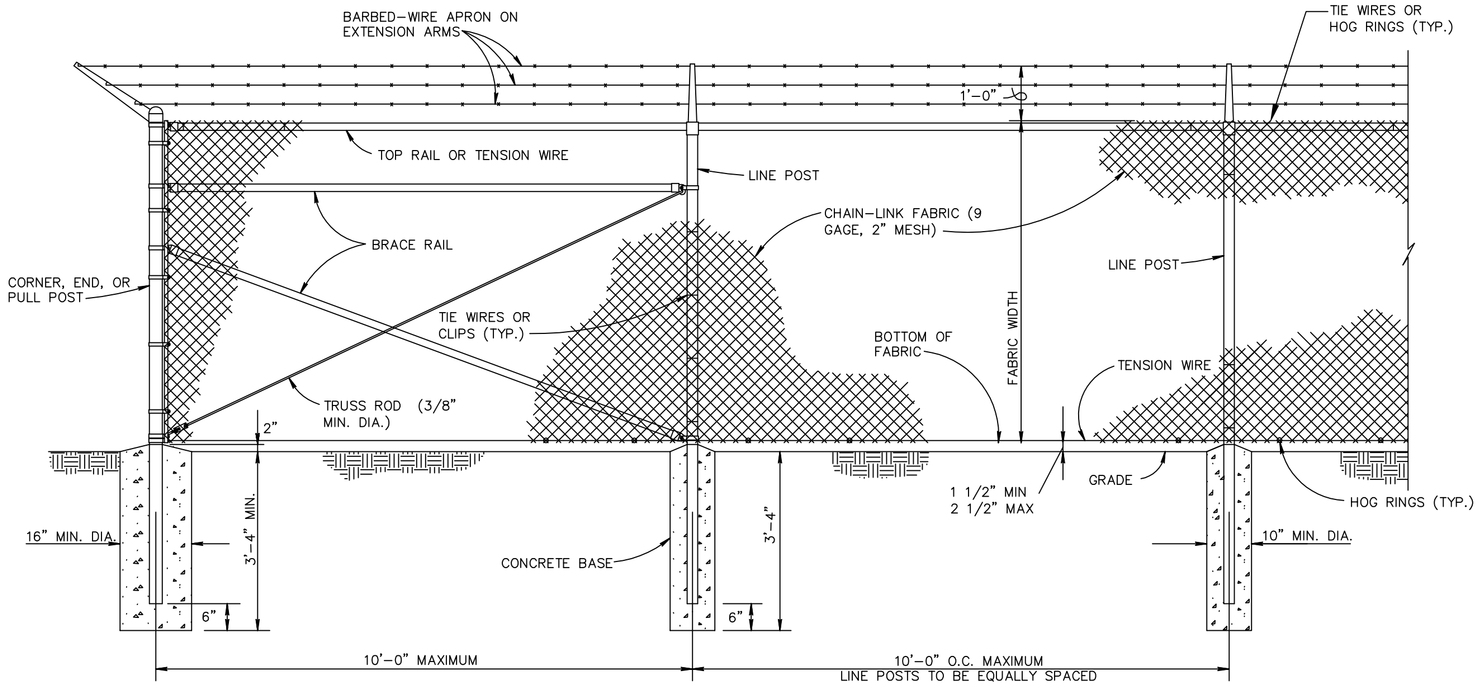

CHAIN-LINK SECURITY FENCE DETAIL

NO SCALE

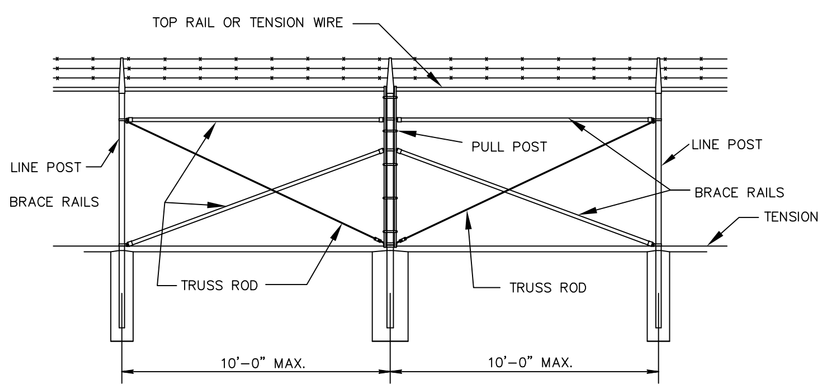

BRACE PANEL DETAIL

NO SCALE

NOTE:

PROVIDE BRACE PANEL WHENEVER STRAIGHT RUNS EXCEED 500 FEET.

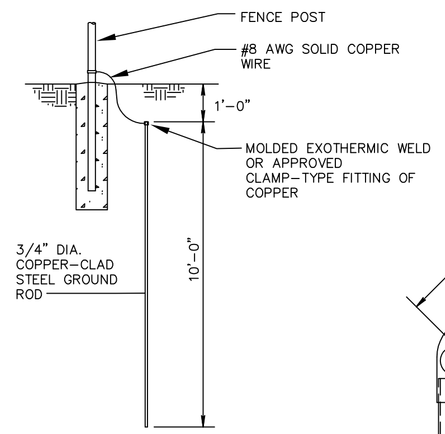

GROUNDING DETAIL

NO SCALE

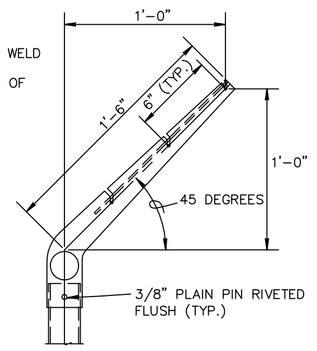

LINE POST

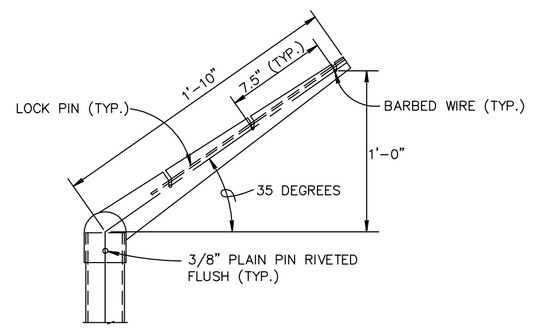

CORNER POST

EXTENSION ARM DETAILS

NO SCALE

1/X PUMP STATION FENCE LINE DETAILS
N.T.S.

STEEL POST SCHEDULE			
USE AND SECTION	MINIMUM OUTSIDE DIMENSIONS (NOMINAL)		
	FABRIC WIDTH 72" OR LESS	FABRIC WIDTH 84" TO 96"	FABRIC WIDTH 108" AND OVER
CORNER, END & PULL POSTS			
TUBULAR – ROUND	2.375" O.D.	2.875" O.D.	4.00" O.D.
TUBULAR – SQUARE	2.00" SQ.	2.50" SQ.	3.00" SQ.
C–SECTION (ROLL–FORMED)	3.50" X 3.50"	3.50" X 3.50"	———
LINE POSTS			
TUBULAR – ROUND	1.90" O.D.	2.375" O.D.	2.875" O.D.
H–SECTION	2.25" X 1.70"	2.25" X 1.70"	2.25" X 1.70"
C–SECTION (ROLL–FORMED)	1.875" X 1.625"	2.25" X 1.70"	———
TOP, BOTTOM & BRACE RAILS			
TUBULAR – ROUND	1.66" O.D.		
TUBULAR – SQUARE	1.50" SQ.		
H–SECTION	1.625" X 1.50"		
C–SECTION (ROLL–FORMED)	1.625" X 1.25"		

NOTES:

1. DETAILS SHOWN ARE TO CLARIFY REQUIREMENTS AND ARE NOT INTENDED TO LIMIT OTHER TYPES OF FENCE SECTIONS AND METHODS OF INSTALLATION THAT COMPLY WITH THE SPECIFICATIONS.

2. WIRE TIES, RAILS, POSTS, AND BRACES SHALL BE CONSTRUCTED ON THE SECURE SIDE OF THE FENCE ALIGNMENT. CHAIN–LINK FABRIC SHALL BE PLACED ON THE SIDE OPPOSITE THE SECURE AREA.

3. ALL FENCE SHALL HAVE A BARBED–WIRE APRON EXTENDED OUTWARD FROM THE AREA BEING PROTECTED.

4. C–SECTION POSTS SHALL BE INSTALLED SO THAT THE VOID INSIDE THE POST IS COMPLETELY FILLED WITH CONCRETE UP TO THE TOP OF THE FOUNDATION.

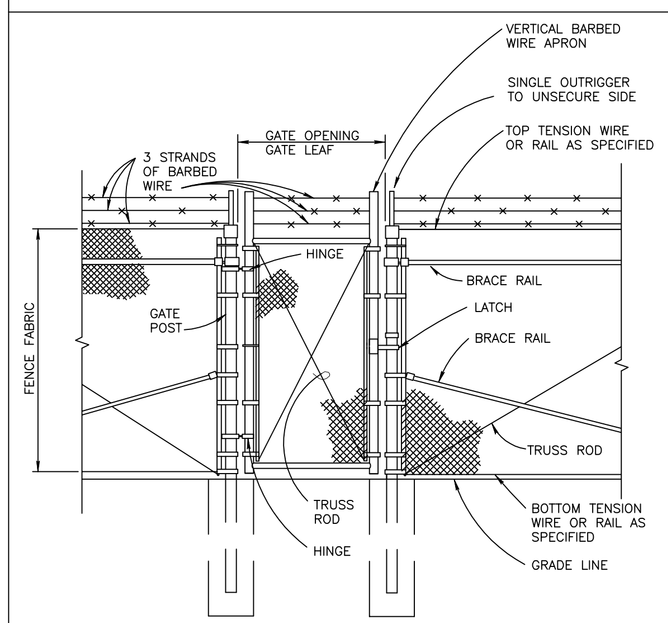

PERSONNEL GATE

NO SCALE

NOTES:

1. FOR NON–SENSORED FENCES, DETAILS SHOWN ARE TO CLARIFY REQUIREMENTS AND ARE NOT INTENDED TO LIMIT OTHER TYPE OF FENCE SECTIONS AND METHODS OF INSTALLATION WHICH COMPLY WITH THE SPECIFICATIONS.

2. SWING GATES SHALL BE CONSTRUCTED WITH DROP RODS, PADLOCKS, LATCH ASSEMBLY AND GATE KEEPERS EXCEPT AS NOTED.

3. ALL GATE FRAMES SHALL MEET THE MINIMUM REQUIREMENTS OF ASTM F900 1.90" NOMINAL (ROUND) OR 2.00" NOMINAL (SQUARE). GATE FRAMES SHALL BE OF WELDED CONSTRUCTION OR SHALL BE ASSEMBLED USING HEAVY FITTINGS. AT CONTRACTOR'S OPTION A WELDED HORIZONTAL BRACE MAY BE USED IN LIEU OF TRUSS RODS TO BRACE ALL–WELDED GATE FRAMES. THE CONTRACTOR SHALL BE RESPONSIBLE FOR THE PROPER RIGID CONSTRUCTION OF ALL GATES SUPPLIED.

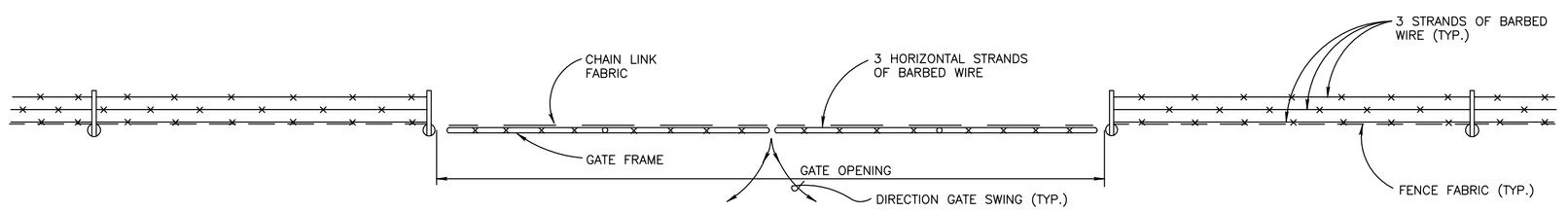

PLAN

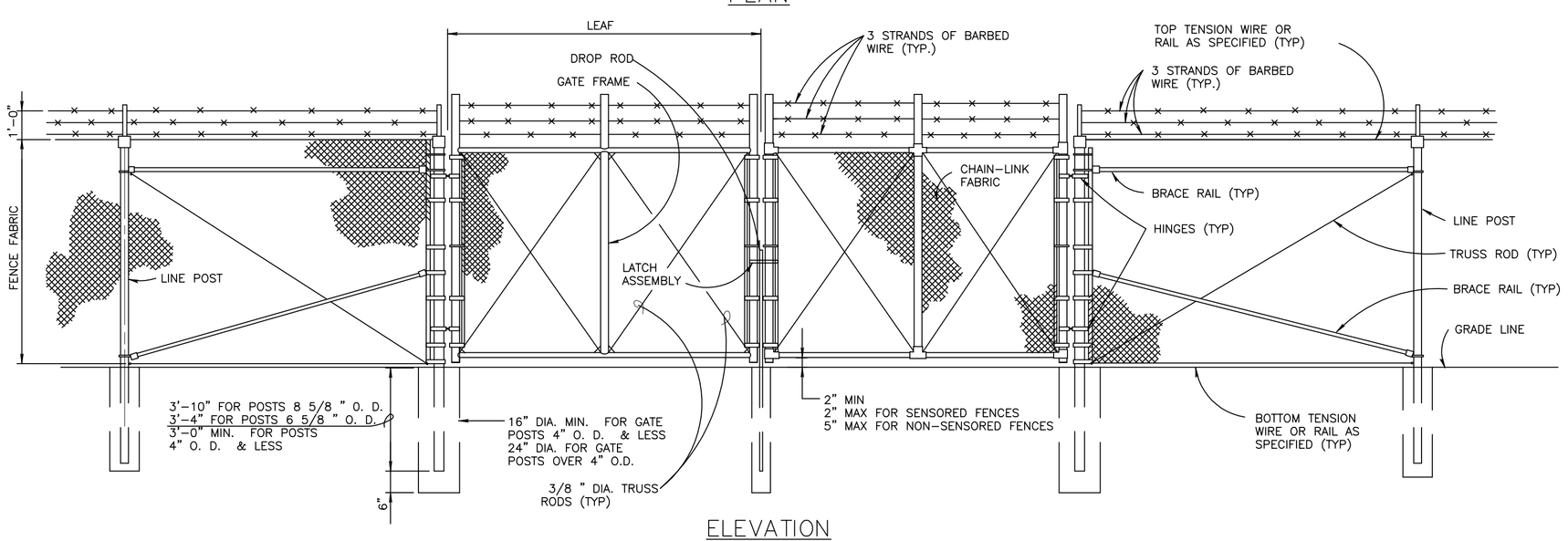

ELEVATION

DOUBLE SWING GATE

NO SCALE

2/X PUMP STATION GATE DETAILS
N.T.S.

GATE POST SCHEDULE	
GATE LEAF WIDTH (NOMINAL)	OUTSIDE DIMENSION (NOMINAL)
6' OR LESS	2.875" OD 2.5" SQ
GREATER THAN 6' TO 12'	4.0" OD
GREATER THAN 12' TO 18'	6.625" OD
MORE THAN 18'	8.625" OD

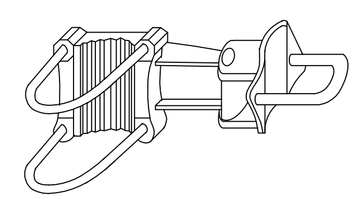

OFFSET HINGE

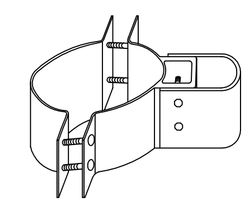

STANDARD HINGE

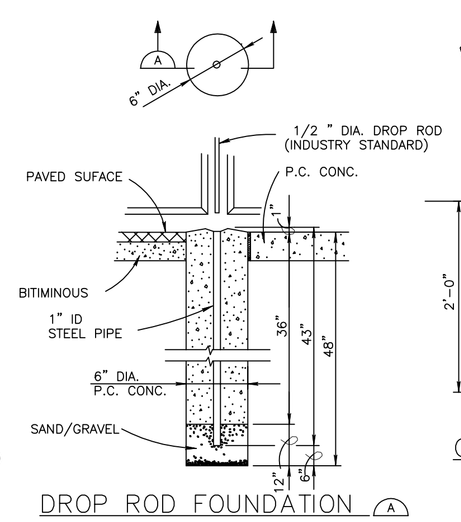

DROP ROD FOUNDATION (A)

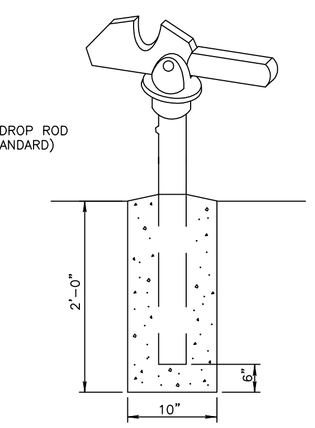

GATE KEEPER
(TO HOLD GATE OPEN)

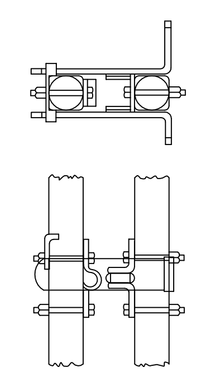

LATCH ASSEMBLY

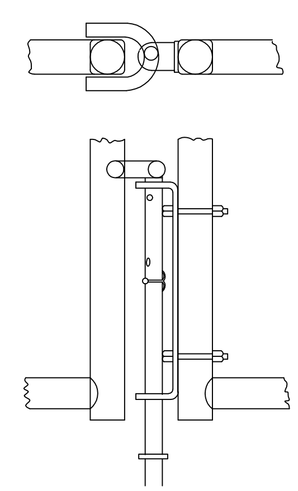

DROP ROD ASSEMBLY

SWING GATE DETAILS

NORTH CHARLESTON
SEWER DISTRICT
7255 STALL ROAD, NORTH CHARLESTON, SC 29406
PH: (843) 764–3072 FAX: (843) 764–2655

N.C.S.D. STANDARD DETAILS

FENCING FOR PUMP STATIONS/FACILITIES

REV. DATE: 3–2–2011 | DWG#: PS–002